3RD ANGLE PROJECTION

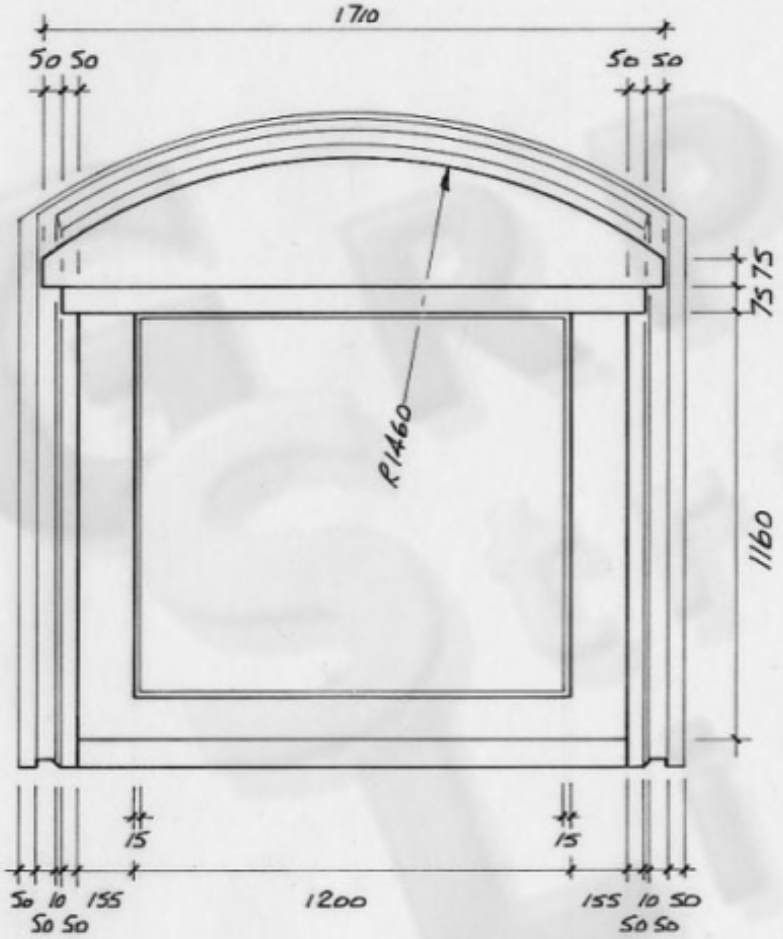

FRONT ELEVATION

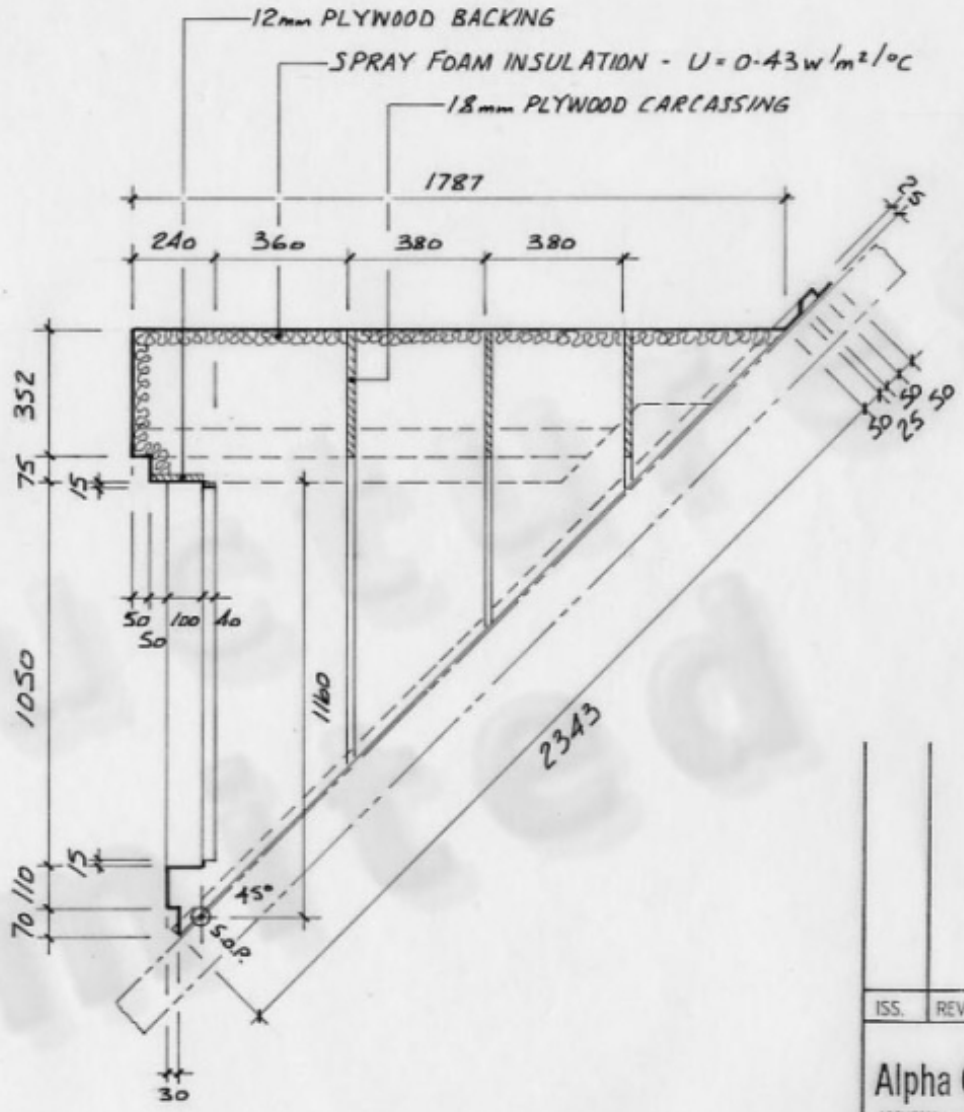

SECTION THROUGH ℄

ISS.	REVISION
Alpha Glass Fibres Ltd. ARCHITECTURAL MOULDINGS	
SITE EARLSWOOD	
TITLE 1200 x 1050 DORMER WINDOW HOUSE TYPES 'A' 'B' 'C' 'D' & 'E'	
SCALE 1:15	DATE 12/8/99
DRAWING NUMBER 8835/02	

DRAWING SIZE A3