3RD ANGLE PROJECTION

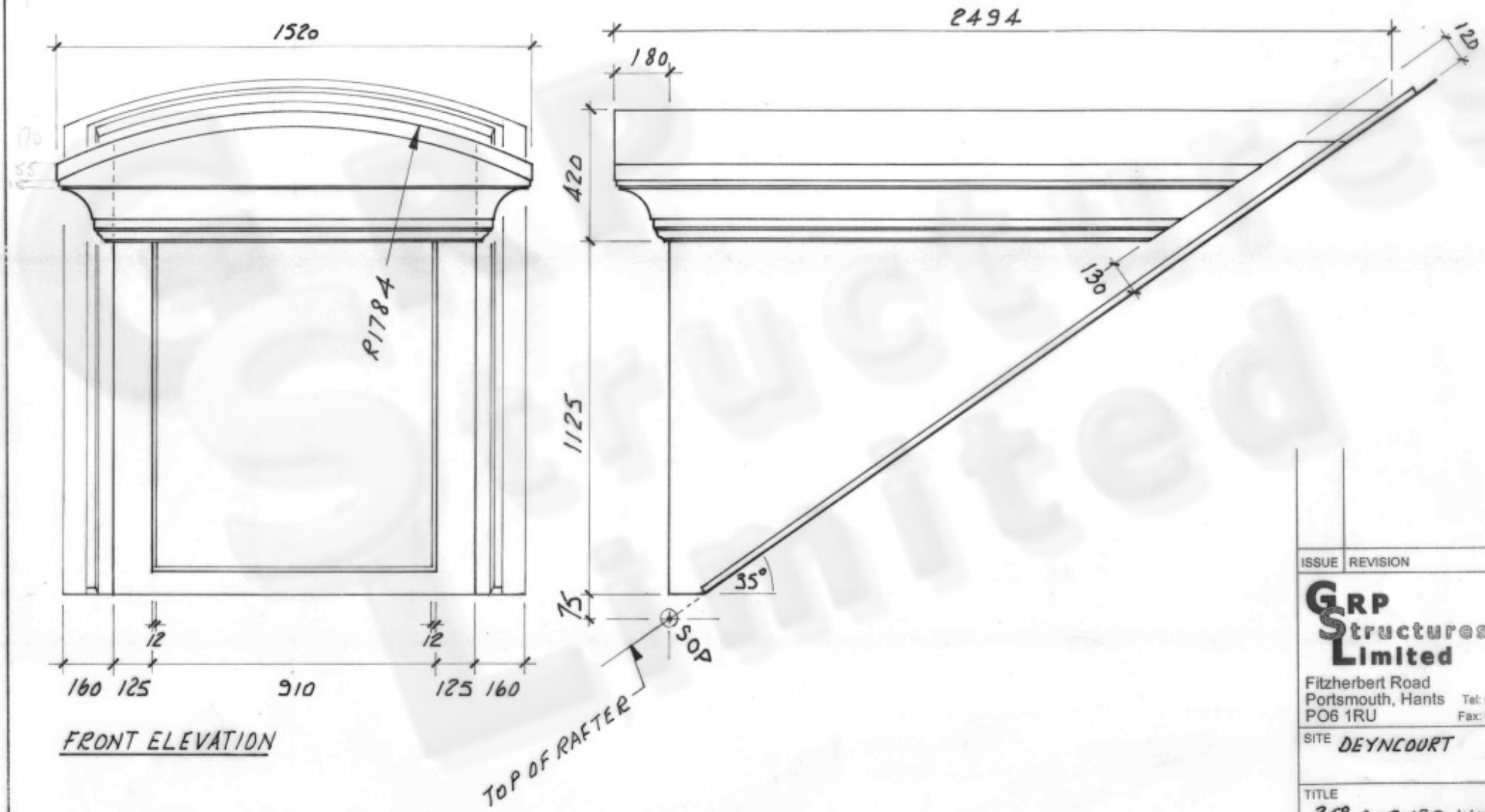

SEE DRAWING NUMBER 80601-02 FOR SECTION

ISSUE	REVISION

GRP Structures Limited
Fitzherbert Road
Portsmouth, Hants
PO6 1RU
Tel: 023 9237 9990
Fax: 023 9221 0716

SITE DEYNCOURT

TITLE 35° DORMER WINDOW

DRAWN	SCALE	DATE
bm	10:125	4-8-06

DRAWING No	SHEET	ISSUE
80601-01		

DRAWING SIZE A3