3RD ANGLE PROJECTION

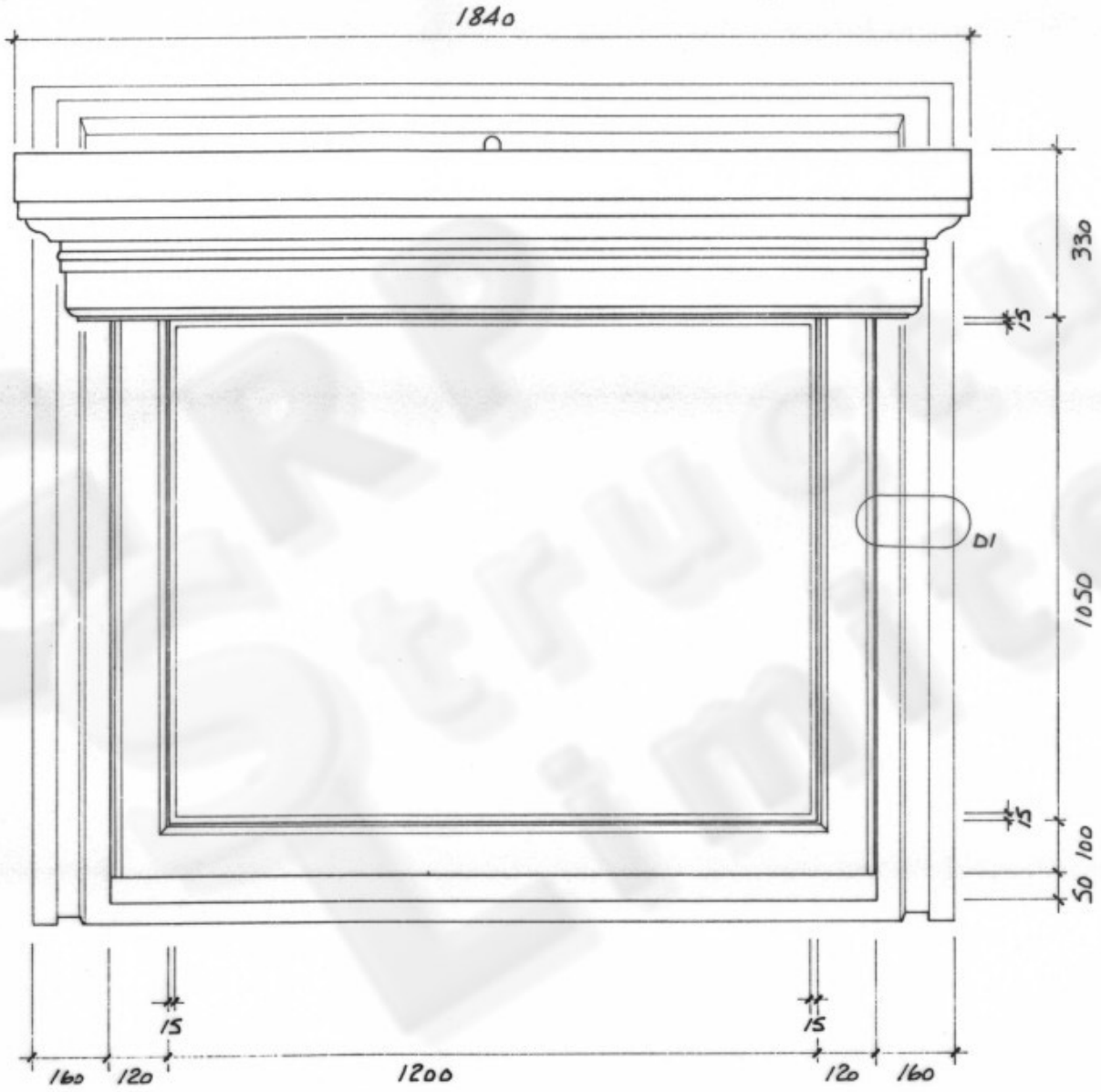

FRONT ELEVATION
N.T.S.

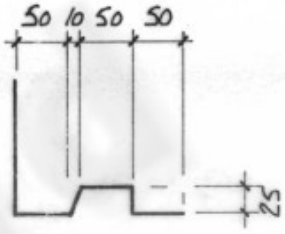

DETAIL - D1
1:5

ISS.	REVISION
Alpha Glass Fibres Ltd. ARCHITECTURAL MOULDINGS	
SITE Falkirk	
TITLE 1200 x 1050 WINDOW DORMER	
SCALE A.N.	DATE 10/1/99
DRAWING NUMBER 8611/12/01	

DRAWING SIZE A3